SCRAP VIEW OF BEARING CARTRIDGE CLAMP

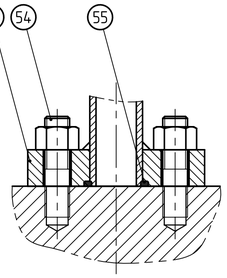

VIEW ON ARROW 'A'

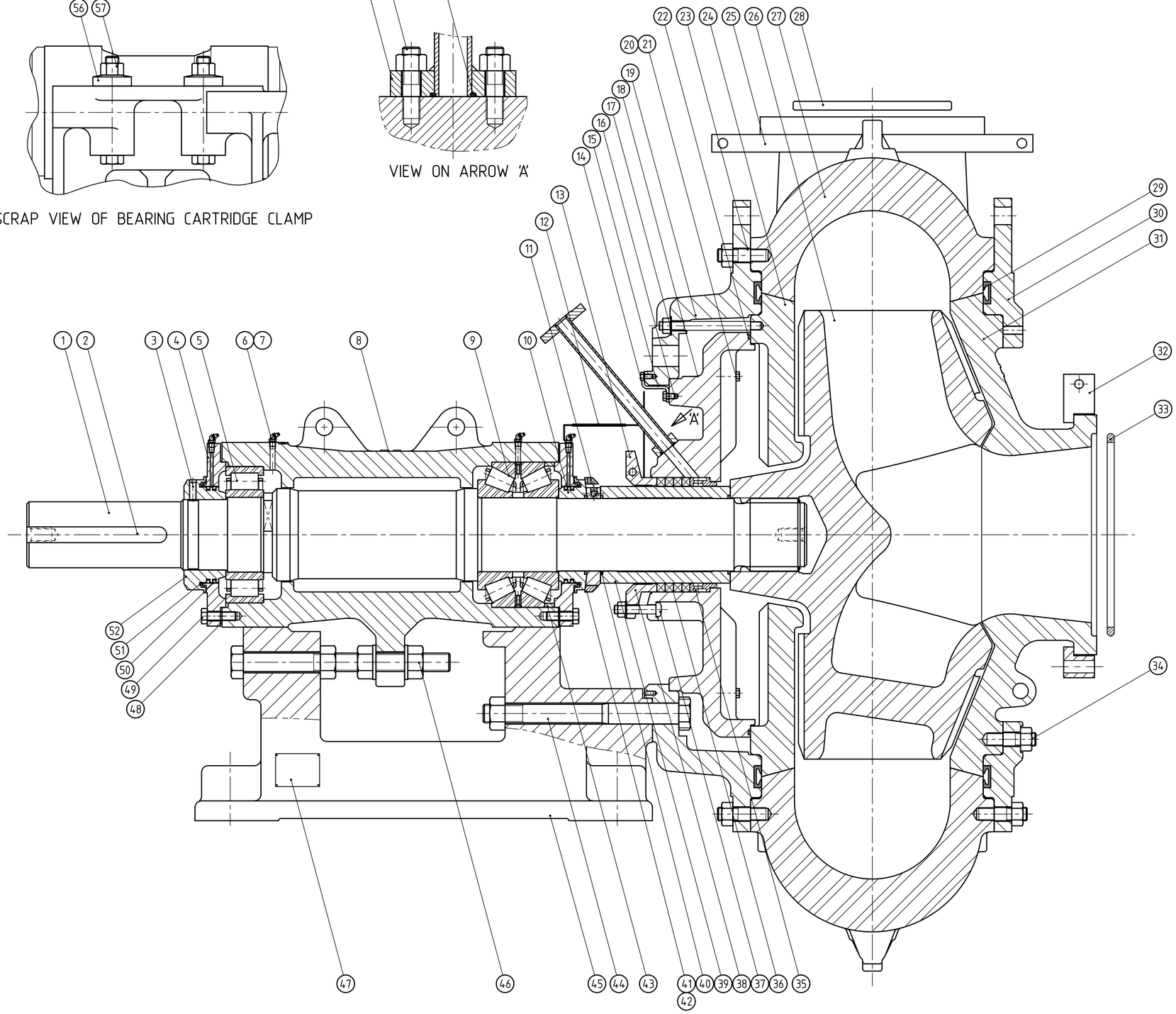

ITEM	QTY	DESCRIPTION	PART No.
1	1	SHAFT	T073ME05
2	1	SHAFT KEY	T070E05
3	2	LABYRINTH SOC SETSCREW	M16A2-40H
4	2	END COVER	T024-10D81
5	1	BEARING D/E	T009D
6	4	GREASE NIPPLE	UP4L72-Z
7	4	GREASE NIPPLE CAP	A365P30
8	1	BEARING HOUSING	T004MD21
9	1	BEARING	T009
10	1	LABYRINTH	T062-10D81
11	1	IMPELLER RELEASE COLLAR	T239MC21H
12	1	GLAND GUARD	TSHG452C22
13	2	GLAND CLAMP BOLT	M16H1-130SN
14	4	SEAL GUARD SETSCREW	M10H2-16S
15	1	CLAMP BRACKET	THG30022E02
16	1	CLAMP BRACKET SETSCREW	M12H2-20ZW
17	8	BACKLINER STUD	M20Z3-215ZS
18	1	STUFFING BOX	THG30078D21
19	1	ADAPTOR PLATE	THG30032D21
20	2	STUFFING BOX SETSCREW	M12H2-20S
21	2	STUFFING BOX WASHER	M12-11-F
22	1	STUFFING BOX 'O' RING	70T895N
23	48	BOWL STUD	M30Z3-80ZN
24	1	BACKLINER	GHG30041A05
25	1	FLANGE	GHG30130E02
26	1	IMPELLER	THG30137LPT1A05D
27	1	BOWL	GHG30131A05
28	1	DISCHARGE JOINT	GHG30372S01
29	2	VOLUTE LINER SEAL	T50124S01
30	1	DOOR CLAMP PLATE	GHG30292D21
31	1	DOOR	GHG30013LPT1A05
32	1	FLANGE	HG16130E02
33	1	INTAKE JOINT	GSM40372S01
34	8	DOOR STUD	M30Z3-80ZN
35	1	LANTERN RESTRICTOR	T118-9C23
36	4	PACKING	T111Q21
37	4	GLAND BOLT	H045MC23
38	1	GLAND	T044C02
39	1	SHAFT SLEEVE	T076C21
40	3	SHAFT SLEEVE 'O' RING	69T164N439
41	1	RETAINING RING	T239MBC23
42	3	SOCKET SET SCREW	M8A2-12S
43	1	BEARING SLEEVE	T008E02
44	5	FRAME PLATE BOLT	T034ME62
45	1	BASE	T003D21
46	1	ADJUSTING SCREW	T001ME62
47	1	NAMEPLATE	NP
48	2	ENDCOVER GASKET	T025S14
49	16	ENDCOVER SETSCREW	T027ME62
50	4	PISTON RING	T108G02
51	2	BEARING SEAL	T089-10S10
52	1	LABYRINTH D/E	T062DM-10D81
53	1	FLUSHING PIPE ADAPTOR	GP273-1E02
54	2	FLUSHING PIPE STUD	DS208ME62
55	1	FLUSHING PIPE 'O' RING	C064S10
56	4	CLAMP WASHER	T011E62
57	4	CLAMP BOLT	T012ME62

Copyright © Weir Minerals Europe Limited. 2009

Weir Minerals Europe Limited. ("the Company") is the owner of the copyright and all confidential information in this drawing.

The drawing must not be copied in whole or in part, in any form or by any means, and the information in it must not be disclosed to any person, or used for any purpose other than the specific purpose for which it has been provided, without the prior written consent of the Company.

No.	DESCRIPTION	BY	DATE	CHK
5				
4				
3				
2	ITEM 42 ADDED.	DHN	NOV.18,2010	
1	ITEM 12, GLAND GUARD, UPDATED TO CAPTIVE FASTENER DESIGN.	SM	26,AUG,2010	KB

REVISIONS

APP.	
CHECK	
DRN.	VIDYA
DATE	01,APR,2009
SCALE	

PRODUCT :

WARMAN® ENVIROTECH®*

Centrifugal Slurry Pumps

*New technology (post 1991) WARMAN® slurry pumps from Weir Minerals are sold as ENVIROTECH® pumps in Africa.

DESIGN CENTRE OF ORIGIN :

TODMORDEN. UK.

TITLE :

COMPONENT DIAGRAM OF 300LP T-SHG WITH RESTRICTED FLOW GLAND SEAL

WEIR MINERALS

DRAWING No. SHG300LPT-CCR-A2

SHEET 1

REV. 2