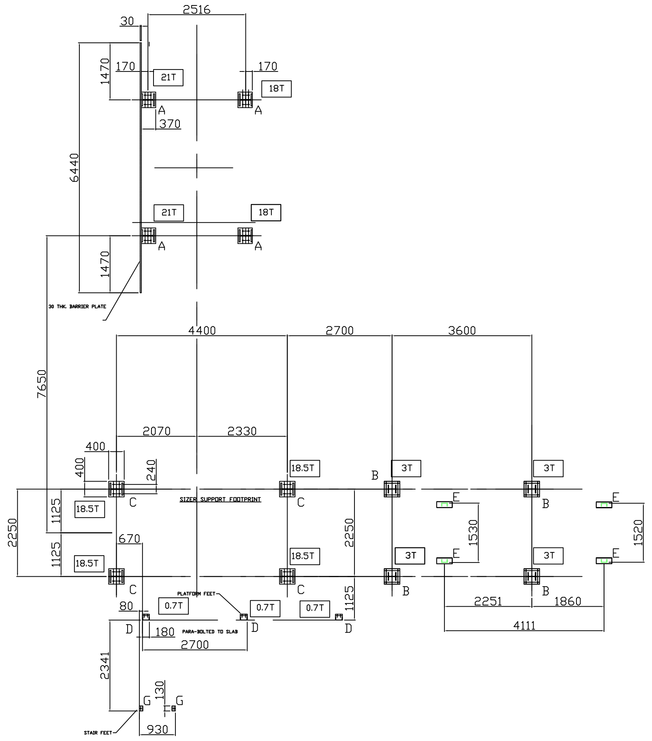
Do Not Scale	If In Doubt Ask

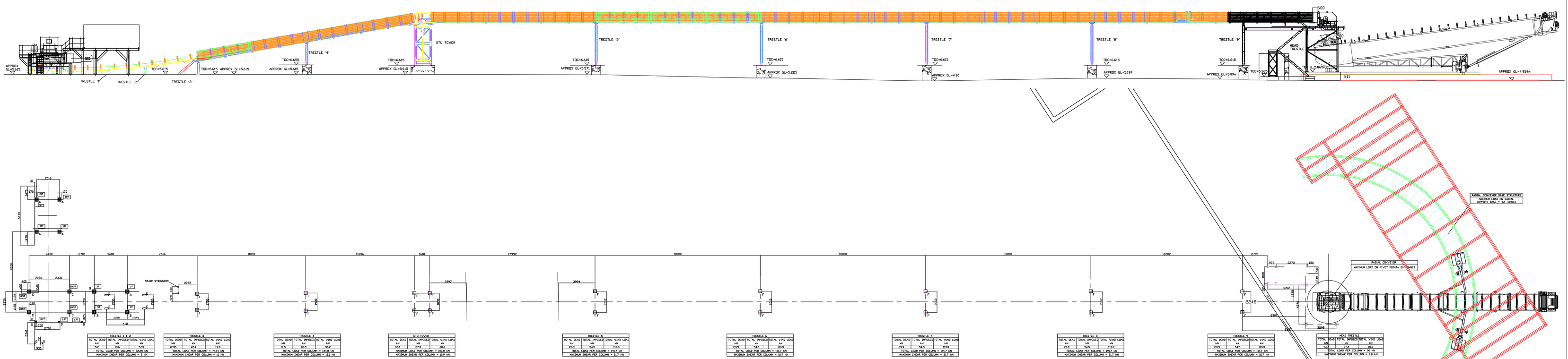
Notes :-

ALL BASE PLATES HAVE 26ø HOLES, PLEASE ADVISE IF FOUNDATION DESIGN REQUIRES LARGER HOLES

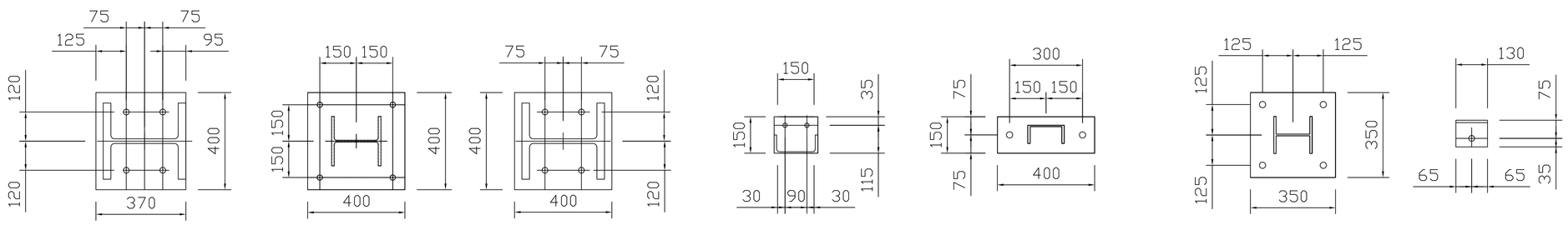
PADS TO BE MARKED WITH CENTRELINE



FEEDER HOPPER
PLAN SCALE 1:75



SCALE 1:150



BASEPLATE A | BASEPLATE B | BASEPLATE C | BASEPLATE D | BASEPLATE E | BASEPLATE F | BASEPLATE G

CROSSRAIL REVIEW AND ACCEPTANCE STATUS

This Decal is to be used for submitted documents requiring acceptance by Crossrail

☐	Code 1 - Accepted. Work may proceed
☐	Code 2 - Not Accepted. Revise and resubmit. Work may proceed subject to incorporation of changes indicated
☐	Code 3 - Not Accepted. Revise and resubmit. Work may not proceed
☐	Code 4 - Received for information only. Receipt is confirmed

Reviewed/ Accepted by (signature) | Print name: | Position: | Date:

Acceptance by Crossrail does not relieve the designer/ supplier from full compliance with their contractual obligations and does not constitute Crossrail approval of design, details, calculations, analyses, test methods or materials developed or selected by the designer/ supplier.

Reviewed by BFK: (signature) | Date:

NORTHFLEET
ELEVATION
FOUNDATIONS / LOADINGS

Burrows Brothers

Drawing No: C300-BFK-C-DWG-CRT00_ST005-50572

Revisions

1.1	PRELIMINARY	MJC	1.4	LEVELS AMENDED	MJC
1.2	PRELIMINARY	MJC	1.5	RADIAL CONVEYOR BASE ADDED	MJC
1.3	LOADINGS AMENDED	MJC	1.6	HEAD MODIFICATION	MJC

26/10/12 MJC

Scale 1:150@A0

CENTRISTIC
CAVALIER ROAD, HEATHFIELD TRADING ESTATE, NEWTON ABBOT, DEVON, TQ12 6TG.
Tel: (+44)1626 834000
Fax: (+44)1626 834001
email: info@centristic.co.uk